REVISION HISTORY			
DATE	REV	ECO#	COMMENT

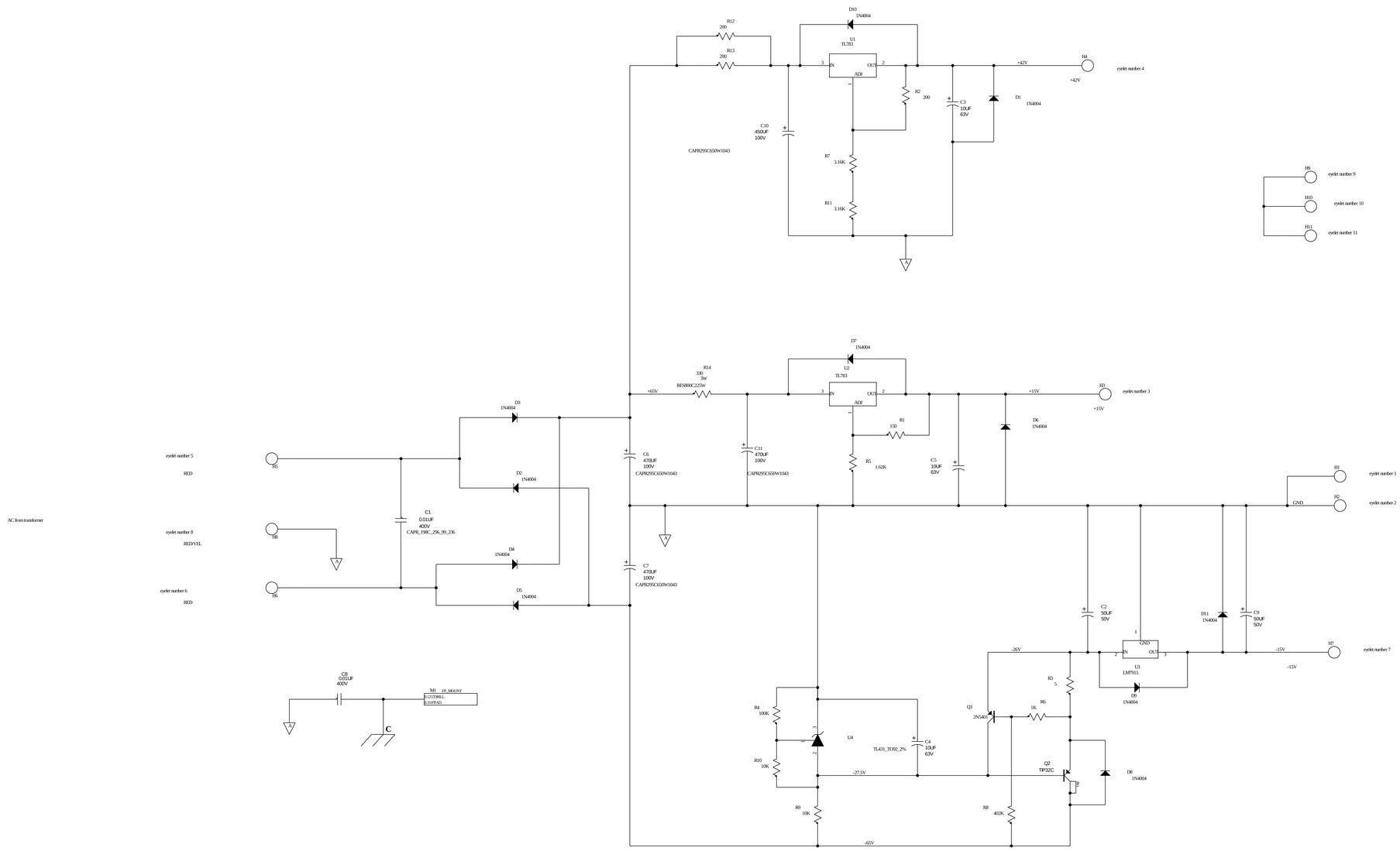

ADTRAN
901 Explorer Blvd.
P.O. Box 140000
Huntsville, Alabama 35814-4000

TITLE **MY TITLE**

DRAWN BY: **DRAWNBY** ENGINEER: **ENGINEER**

SIZE D

DRAWING NUMBER **REGULATOR_D**

FILE: **(See Drawing Number)**

DATE: 7-25-2016_14:48 SHEET 1 OF 1